SHIMANO

TYRNOS A-RB

TYR-16

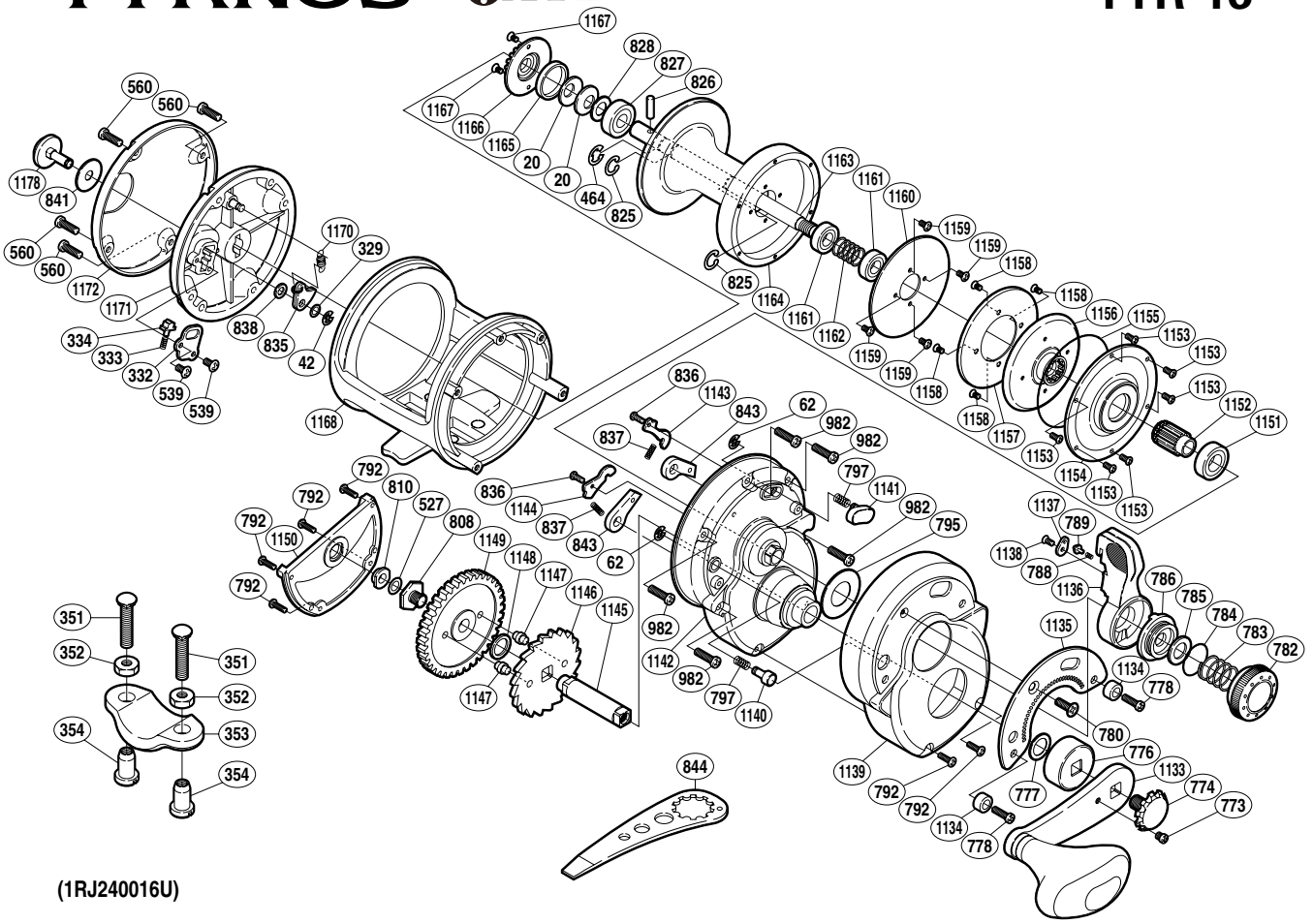

(1RJ240016U)

Part No.	Description	Part No.	Description	Part No.	Description
TGT0020	Coned Disc Spring	TGT0825	C Lock	TGT1151	Ball Bearing
TGT0042	E Lock	TGT0826	Cross Pin	TGT1152	Pinion Gear
TGT0062	E Lock	TGT0827	Ball Bearing	TGT1153	Screw
TGT0329	Spacer	TGT0828	Bearing Thrust Washer	TGT1154	Cooling Shield
TGT0332	Click Spring Retainer	TGT0835	Click Pawl	TGT1155	O Ring
TGT0333	Click Spring	TGT0836	Screw	TGT1156	Pinion Guard
TGT0334	Click Spring Holder	TGT0837	Anti-Reverse Pawl Spring	TGT1157	Drag Plate
TGT0464	E Lock	TGT0838	Spacer	TGT1158	Screw
TGT0527	Spacer	TGT0841	Click Button Spacer	TGT1159	Screw
TGT0539	Screw	TGT0843	Anti-Reverse Pawl	TGT1160	Drag Washer
TGT0560	Screw	TGT0982	Screw	TGT1161	Ball Bearing
TGT0773	Screw	TGT1133	Handle	TGT1162	Pressure Release Spring
TGT0774	Handle Bolt	TGT1134	Screw Shield	TGT1163	Spool Shaft
TGT0776	Gear Shaft Shield	TGT1135	Lever Quadrant	TGT1164	Spool
TGT0777	Gear Shaft Thrust Washer	TGT1136	Drag Control Lever	TGT1165	Click Gear Spacer
TGT0778	Screw	TGT1137	Lever Click Cover	TGT1166	Click Gear
TGT0780	Screw	TGT1138	Screw	TGT1167	Screw
TGT0782	Pre-Program Dial	TGT1139	Right Side Plate Cover	TGT1168	One-Piece Frame
TGT0783	Dial Spring	TGT1140	Free Spool Detent	TGT1170	Click Pawl Spring
TGT0784	O Ring	TGT1141	Strike Stop	TGT1171	Left Side Plate
TGT0785	Drag Cam Washer	TGT1142	Right Side Plate	TGT1172	Left Side Plate Cover
TGT0786	Lever Shaft Body	TGT1143	Anti-Reverse Pawl Keeper A	TGT1178	Click Button
TGT0788	Lever Click Shoe	TGT1144	Anti-Reverse Pawl Keeper B		
TGT0789	Lever Click	TGT1145	Drive Shaft	TGT0351	Rod Clamp Bolt (accessory)
TGT0792	Screw	TGT1146	Anti-Reverse Ratchet	TGT0352	Rod Clamp Nut B (accessory)
TGT0795	Lever Thrust Ring	TGT1147	Anti-Reverse Ratchet Pin	TGT0353	Rod Clamp (accessory)
TGT0797	Pressure Spring	TGT1148	Anti-Reverse Ratchet Spacer	TGT0354	Rod Clamp Nut A (accessory)
TGT0808	Drive Shaft Screw	TGT1149	Drive Gear		
TGT0810	Drive Shaft Bushing	TGT1150	Right Side Seal	TGT0844	Wrench (accessory)