SHIMANO

SUSTAIN

SA-3000XGFI

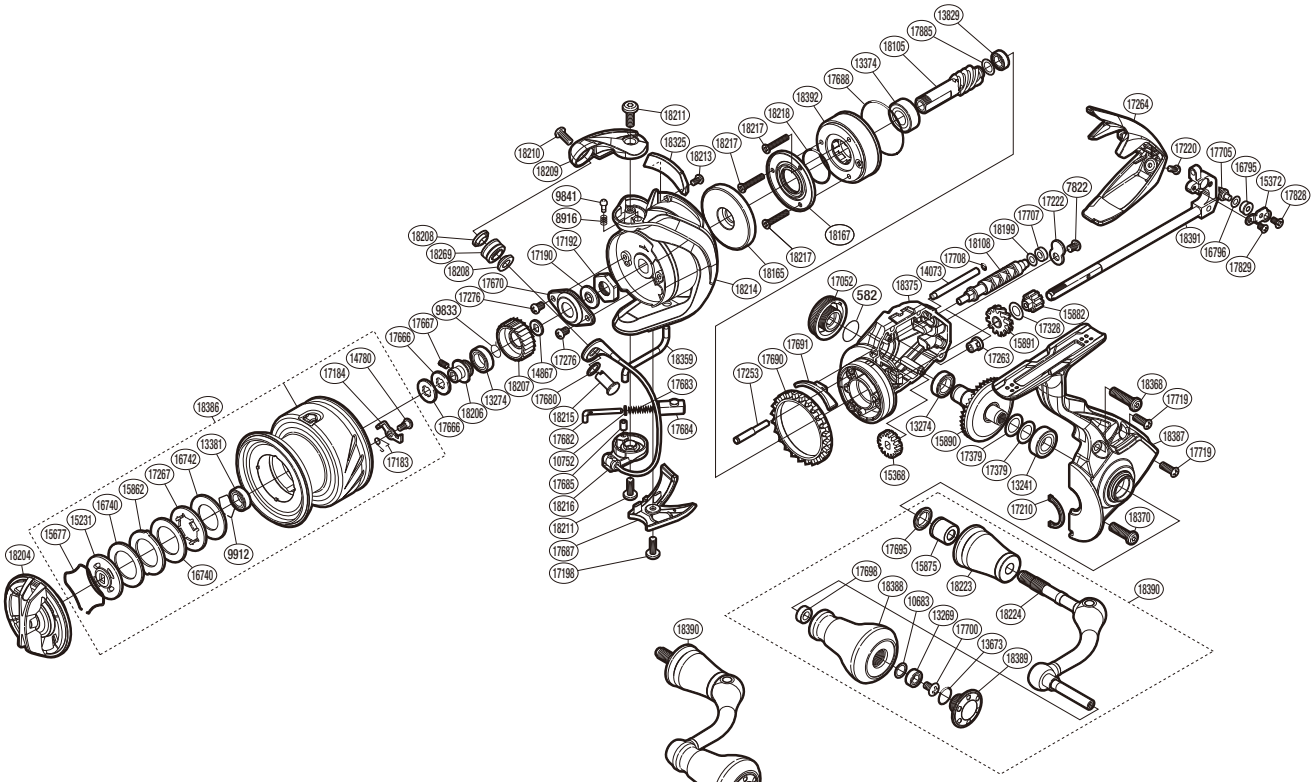

SA-RB
(51SF12F035X)

Please note that the number of adjusting washers may not be the same as shown in the exploded views. (Adjustment will vary with each individual product.)

Part No.	Description	Part No.	Description	Part No.	Description
RD 0582	O Ring	RD17192	Rotor Nut	RD18108	Worm Shaft
RD 7822	Screw	RD17198	Screw	RD18165	Rotor Ring
RD 8916	Click Spring	RD17210	Flange Water Proof	RD18167	Roller Clutch Reinforce
RD 9833	Ratchet Spring	RD17220	Screw	RD18199	Washer
RD 9841	Click Pin	RD17222	Worm Shaft Retainer	RD18204	Drag Knob
RD 9912	Bearing Retainer	RD17253	Idle Gear B Shaft	RD18206	Spool Bushing
RD10683	Washer	RD17263	Worm Bushing (Front)	RD18207	Drag Click Ratchet
RD10752	Bail Spring Guide A Support	RD17264	Rear Protector	RD18208	Spacer
RD13241	Ball Bearing	RD17267	Key Washer	RD18209	Bail Arm
RD13269	Ball Bearing	RD17276	Screw	RD18210	Screw
RD13274	Ball Bearing	RD17328	Washer	RD18211	Screw
RD13374	Ball Bearing	RD17379	Washer	RD18213	Screw
RD13381	Ball Bearing	RD17666	Spool Washer	RD18214	Rotor
RD13673	O Ring	RD17667	Set Screw	RD18215	Line Roller Support
RD13829	Ball Bearing	RD17670	Rotor Nut Lock Plate	RD18216	Bail Assembly
RD14073	Oscillating Guide	RD17680	Washer	RD18217	Screw
RD14780	Screw	RD17682	Bail Spring Guide A	RD18218	Roller Clutch O Ring
RD14867	Spool Support	RD17683	Bail Spring	RD18223	Handle Shaft Cover
RD15231	Key Washer	RD17684	Bail Spring Seat	RD18224	Handle Shank Assembly
RD15368	Idle Gear	RD17685	Bail Spring Guide A Bush	RD18269	Line Roller (With Bearing)
RD15372	Oscillating Pawl Cover	RD17687	Bail Hold Support Guard	RD18325	Counterweight Assembly
RD15677	Drag Washers Retainer	RD17688	O Ring	RD18359	Bail Trip Lever
RD15862	Eared Washer	RD17690	Friction Ring	RD18368	Screw
RD15875	Handle Shaft Cover B	RD17691	Bail Trip Strike	RD18370	Screw
RD15882	Idle Gear B (Small)	RD17695	Handle Shaft Seal	RD18375	Body
RD15890	Drive Gear	RD17698	Handle Knob Bushing	RD18386	Spool Assembly
RD15891	Idle Gear B (Large)	RD17700	Screw	RD18387	Side Cover
RD16740	Drag Washer	RD17705	Oscillating Pawl	RD18388	Handle Knob
RD16742	Drag Washer	RD17707	Worm Bushing (Rear)	RD18389	Handle Knob Seal
RD16795	Oscillating Slider Bushing	RD17708	O Ring	RD18390	Handle Assembly
RD16796	Spacer	RD17719	Screw	RD18391	Main Shaft Assembly
RD17052	Handle Screw Cap	RD17828	Screw	RD18392	Roller Clutch Assembly
RD17183	Drag Click Spring	RD17829	Screw		
RD17184	Drag Click	RD17885	Washer		
RD17190	Bearing Water Proof	RD18105	Pinion Gear	RD18054	Anti Line Slip Sticker