SHIMANO

FX

FX-4000FB

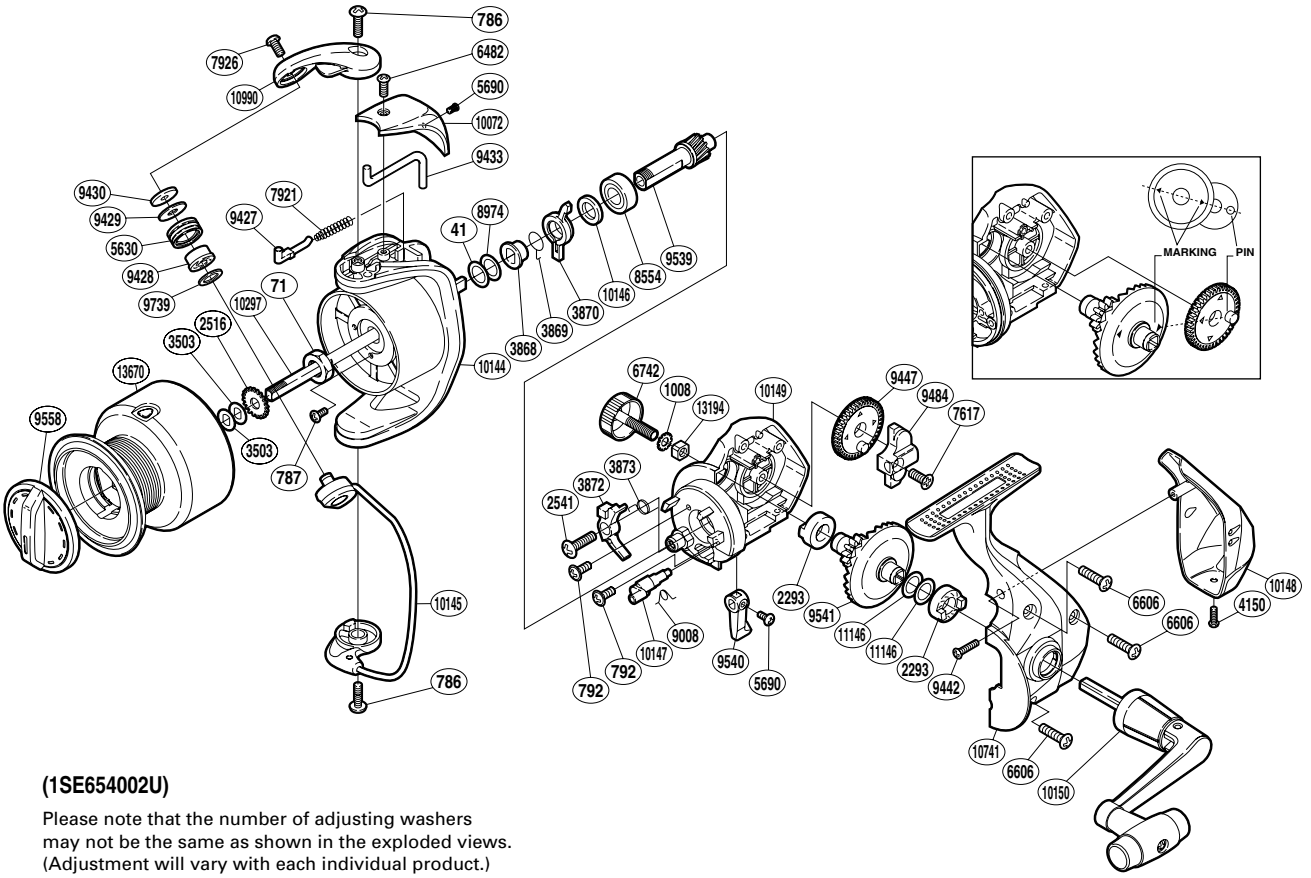

(1SE654002U)

Please note that the number of adjusting washers may not be the same as shown in the exploded views. (Adjustment will vary with each individual product.)

Part No.	Description	Part No.	Description	Part No.	Description
RD 0041	Washer	RD 6482	Screw	RD 9540	Anti-Reverse Lever
RD 0071	Rotor Nut	RD 6606	Screw	RD 9541	Drive Gear
RD 0786	Screw	RD 6742	Handle Screw Cap	RD 9558	Drag Knob
RD 0787	Screw	RD 7617	Screw	RD 9739	Bearing Spacer
RD 0792	Screw	RD 7921	Bail Spring	RD10072	Bail Spring Cover
RD 1008	Handle Lock Washer	RD 7926	Screw	RD10144	Rotor
RD 2293	Drive Gear Bushing	RD 8554	Ball Bearing	RD10145	Bail Assembly
RD 2516	Spool Support	RD 8974	Washer	RD10146	Washer
RD 2541	Screw	RD 9008	Anti-Reverse Cam Spring	RD10147	Anti-Reverse Cam
RD 3503	Spool Washer	RD 9427	Bail Spring Guide	RD10148	Rear Protector
RD 3868	Lock Out Spring Holder	RD 9428	Line Roller Bushing	RD10149	Body
RD 3869	Anti-Reverse Lock Out Spring	RD 9429	Line Roller Spacer	RD10150	Handle Assembly
RD 3870	Anti-Reverse Lock Out	RD 9430	Line Roller Washer	RD10297	Main Shaft
RD 3872	Anti-Reverse Pawl	RD 9433	Bail Trip Lever	RD10741	Side Cover
RD 3873	Anti-Reverse Pawl Spring	RD 9442	Screw	RD10990	Bail Arm
RD 4150	Screw	RD 9447	Oscillating Gear	RD11146	Washer
RD 5630	Line Roller	RD 9484	Oscillating Slider	RD13194	Handle Screw Lock
RD 5690	Screw	RD 9539	Pinion Gear	RD13670	Spool Assembly